Offered by
LASER LAB SOURCE

manufactured by AeroDIODE

DFB BUTTERFLY LASER DIODE

1550nm, 40mW, Ultra-Narrow Line Width

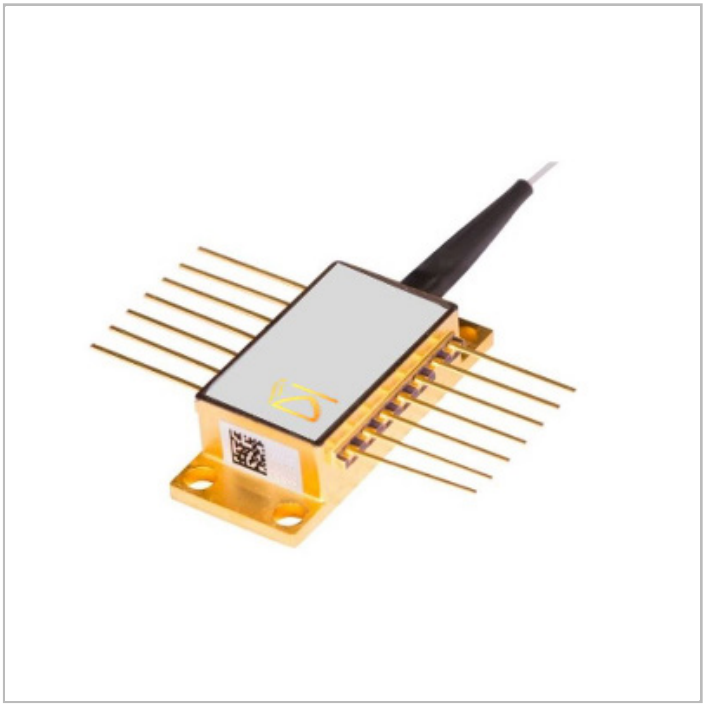

1550nm DFB Laser Diode
1550nm-Model 6

- CW Output Power: 40 mW
  Pulsed Output Power: 80 mW
- Spectral Width (FWHM): < 50 kHz
- 14-Pin Butterfly Package, Industry Standard Type 1 Pin Configuration
- SMF28 Fiber, FC/APC Connector
- PM1550 Polarization-Maintaining Fiber Available as an Option

Distributed Feedback Laser Diode, Ultra-Narrow Linewidth Emission

These DFB lasers offer a single longitudinal mode (single frequency) emission profile and up to 40mW CW output power and 80mW pulsed. DFB lasers utilize Bragg diffraction gratings in the active gain region of the semiconductor material to form a waveguide. Their high stability and wavelength tuneability make them an excellent choice for sensing, spectroscopy, metrology, telecom, and atomic physics research applications.

These laser diodes are offered in an industry standard 14-pin butterfly package with a single-mode fiber pigtail, terminated with an FC/APC connector. They have an integrated optical isolator, thermoelectric cooler, an internal 10 kΩ thermistor, and an internal monitor photodiode. The package is electrically floating relative to ground, offering flexibility in mounting and control of the laser.

ELECTRICALLY FLOATING PACKAGE

TYPE 1 PIN CONFIGURATION

Type 1

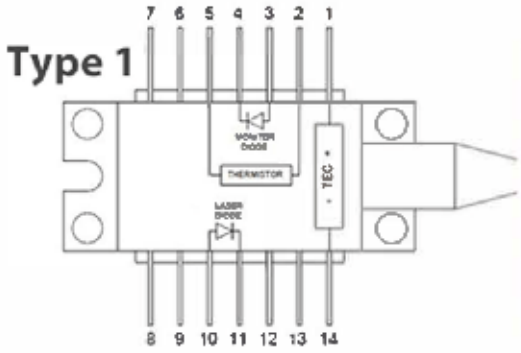

№	Description	№	Description
1	TEC Anode	14	TEC Cathode
2	Thermistor	13	n/c
3	Monitor PD Anode	12	n/c
4	Monitor PD Cathode	11	LD Cathode
5	Thermistor	10	LD Anode
6	n/c	9	n/c
7	n/c	8	n/c

Specifications for Part Number 1550LD-6-0-0 / LASER-DIODE

OPTICAL SPECIFICATIONS (TYPICAL)

- Center Wavelength: 1550 nm ±5 nm
- Output Power (CW): 40 mW
- Emission Bandwidth: < 50 kHz (typ)
- SMSR: 35 dB min (50 dB typ)
- Wavelength Shift w/Temperature: 0.08 nm/°C
- Wavelength Shift w/Current: 0.003 nm/mA
- Pulsed Output Power: 80 mW

ELECTRICAL SPECIFICATIONS (TYPICAL)

- Threshold Current: 8 mA (typ)
- Operating Current: 300 mA (typ)
- Operating Voltage: 1.6 V (typ)
- TEC Current: 1 A (max)
- TEC Voltage: 1.5 V (max)
- Thermistor: 10 kOhm
- Internal Photodiode Responsivity: 5 mA / W
- Internal Photodiode Dark Current: 500 nA

FIBER PIGTAIL AND TERMINATION

- Single Mode SMF28, Fiber Core: 9 µm
- Polarization Maintaining Fiber Available Optionally
- FC/APC Connector

Offered by
LASER LAB SOURCE

manufactured by AeroDIODE

Test Data for 1550nm Ultra-Narrow Line Width DFB Laser Diode, 40 mW Output

1550NM-Model 6
Power vs. Current (L-I) Performance

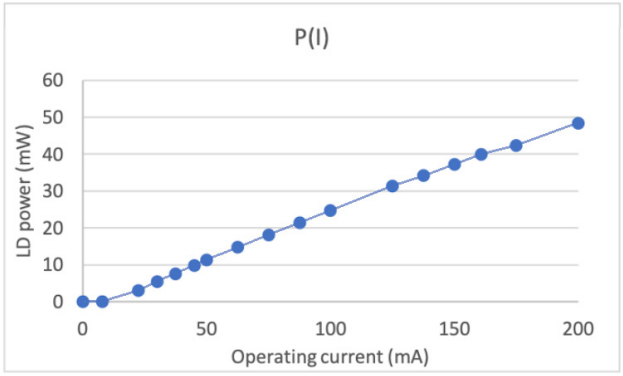

1550NM-Model 6
Relative Intensity Noise Performance

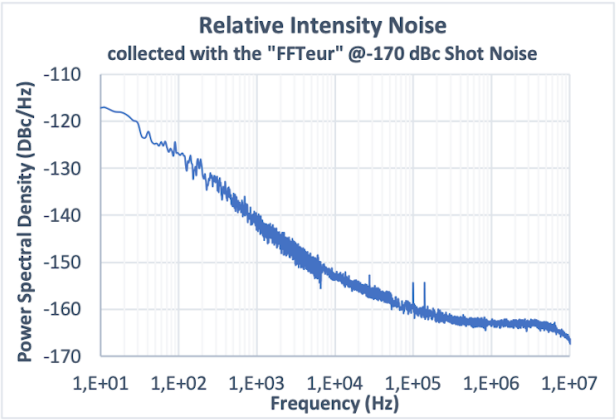

Recorded at 40 mW LD power with
Attenuation to 8 mW for RIN measurement

1550NM-Model 6 Ultra-Narrow Line Width

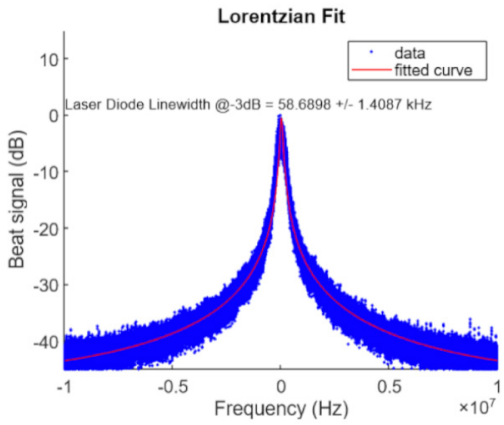

Lorentzian Fit = $10 * log10\left(\frac{10^A}{2*pi*\left(\left(\frac{gamma}{4}\right)+\left(\frac{x-x0}{gamma}\right)^2\right)} + 10^{offset}\right)$

Self-Heterodyne Measurements with 6 km delay fiber

1550NM-Model 6 Frequency Fluctuation

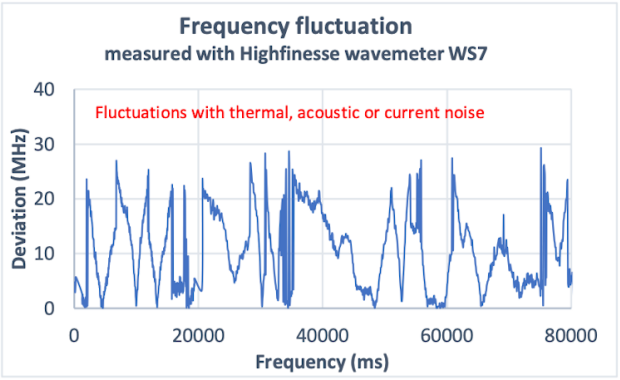

Recorded at 40 mW LD power with
attenuation to 500 µW for frequency stability measurement

Laser Lab Source
a division of Research Lab Source Corporation

www.LaserLabSource.com
phone: 800-887-5065

670 South Ferguson
Bozeman, MT 59718

Product Sales and Service

Orders for this product are fulfilled by LaserDiodeControl.com, part of the Laser Lab Source group. It is manufactured by Aerodiode, Talence, France.

Product Warranty

This product is sold with a full one-year warranty. It is warrantied to be free from defects in material and/or workmanship for a period of one year from the date of shipment.

Laser Lab Source, a Division of Research Lab Source, Inc.
670 S. Ferguson St., Suite 3
Bozeman, MT 59718 USA

Phone: 800-887-5065

AeroDiode
Institut d'optique d'Aquitaine
Rue François Mitterrand
Talence, France 33400

Tél. : +33 (0)6 27 69 41 52