LIMO15-F200-DL1470-EX1257

High Power Diode Laser System for Medical Applications

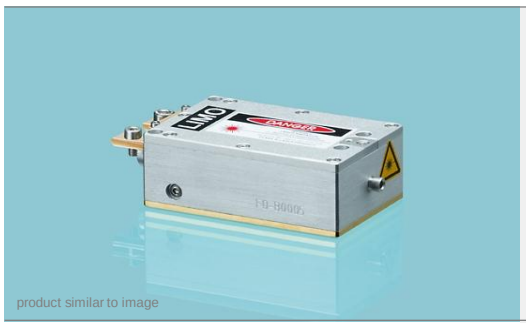

Your product benefits:

| Medical Solutions |

- Plug and play fiber connector
- Compact housing
- High E/O efficiency
- Hermetically sealed housing
- 2 temperature sensors (NTC/PT100)
- Exchangeable protection window

Laser Module	Unit	Value
Optical Data		
CW - nominal output power	W	15
Center wavelength	nm	1470
Wavelength tolerance (±)	nm	20
Spectral width (FWHM)	nm	12
Wavelength temperature drift	nm/K	0,35

	Unit	Value
Fiber Connection Data		
Fiber core diameter	µm	200
Numerical aperture		0,22
Fiber - optic connector		SMA905
Cladding mode (max)	%	Not specified

Thermal Operation Conditions		
Nominal diode heat sink temperature	°C	25
Diode heat sink operation temperature	°C	+15…30
Minimum heat sink capacity	W	100

Package		
Dimensions	mm³	111x54x35
Weight basic package	kg	0,6
Storage temperature	°C	-20…+60

Electrical Data		
Max. operation current start of life	A	55
Max. operation current end of life	A	66
Typical threshold current	A	10
Typical operation voltage	V	2
Typical slope	W/A	0,3
Typical O/E efficiency	%	18

Additional Features	Unit	Value
Pilot Beam		
Output power (min)	mW	1
Wavelength	nm	635
Voltage	V	3…5
Current (max)	mA	120
2 x Fiber detection sensor (PNP)		
Voltage	V	12
Current (max)	mA	100

	Unit	Value
2 x Monitor diode		
Operation voltage	V	5
Output signal (min)	V	0
Output signal (max)	V	2,5
Other Features		
Temperature sensors		NTC & PT100
Exchangeable protection window		Yes

LIMO15-F200-DL1470-EX1257

High Power Diode Laser System for Medical Applications

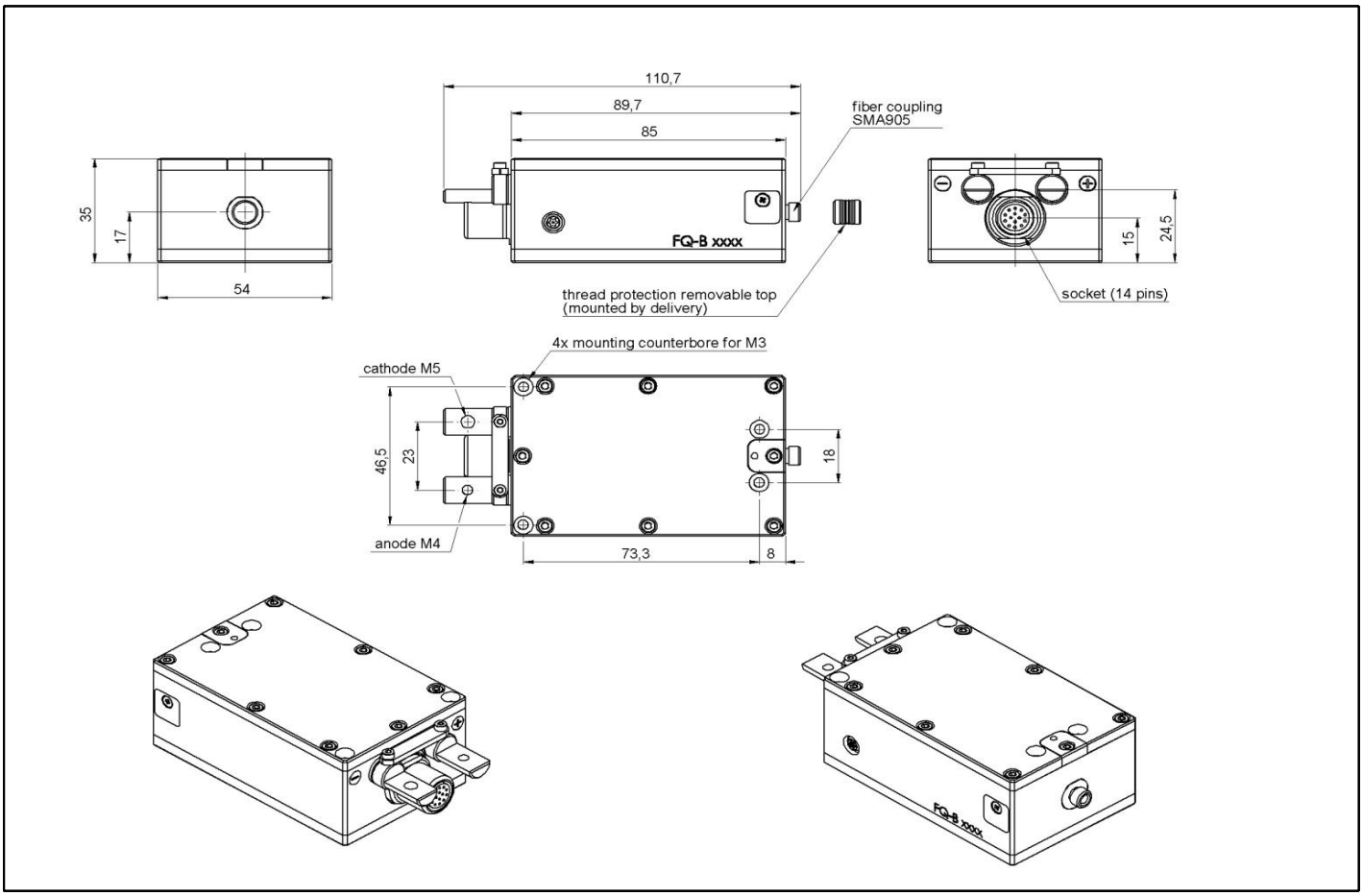

LIMO15-F200-DL1470-FQ-B with thermoelectric cooling

RoHS compliant
2002/95/EG

All data provided are typically measured with a diode heat sink temperature of 25 °C. All measurements are made with a LIMO reference fiber 200 µm, length 1.5 m, and non AR coated.

Copyright © 2012 LIMO GmbH. All rights reserved. All LIMO products are patent pending. Subject to change without notice.

Version January 31, 2013

LIMO Lissotschenko Mikrooptik GmbH | Bookenburgweg 4-8 | 44319 Dortmund, Germany | Phone: +49 - 231- 22 24 1 - 0 | Fax: +49 - 231- 22 24 1 - 140 | www.limo.de | kontakt@limo.de | Management: Dr. Vitalij Lissotschenko and Dr. Lutz Aschke and Dr. Paul Harten | Trade Register Dortmund HRB 11639