JENOPTIK

Fiber-Coupled Diode Lasers

cw, passively cooled with tap water

JOLD-250-CPXF-2P2

Design 215640224

Features:

- High optical output power of 250 W cw
- Fiber core diameter: 400 µm (NA 0.22)
- Integrated pilot laser and power monitor
- Long lifetime > 20,000 h, high reliability

Applications:

- Pumping of solid-state lasers and fiber lasers
- Material processing
- Medical applications

Fiber-Coupled Diode Lasers

cw, passively cooled with tap water

Specifications (Start of Life)

Product	JOLD-250-CPXF-2P2 Design 215640224			
Operation Mode	cw, power modulation only between threshold and maximum current			
Maximum Pulse Length / Duty Cycle				
Maximum Optical Output Power	250	250	250	W
Center Wavelength at 22 °C*	915	938	976	nm
Center Wavelength Variation at 22 °C*	5	5	3	nm
Typical Spectral Bandwidth (FWHM)	3	3	3	nm
Maximum Spectral Bandwidth (FWHM)	5	5	5	nm
Typical Operation Current	130	130	130	A
Maximum Operation Current	140	140	140	A
Typical Threshold Current	15	15	15	A
Maximum Threshold Current	18	18	18	A
Typical Slope	2.2	2.2	2.2	W/A
Minimum Slope	2.0	2.0	2.0	W/A
Maximum Operating Voltage	8	8	8	V
Fiber Properties	400 µm, NA 0.22; metal armored patchcord only			
Fiber Connector	HP-SMA 905, epoxy free, both ends free standing			
Power Monitor	Infineon, SFH 229			
Pilot Laser	0.5 ... 3 mW, 650 nm ± 15 nm, 3 ... 5 V, 40 ± 15 mA, power not adjustable (only for teaching and targeting purposes before laser operation)			
Anode, Cathode Connectors	M8, M6 (e.g. socket cap screws ISO 4762)			
Signal Connector	D-Sub, male, 9 pin			
Operation Conditions	Non-condensing atmosphere			
Expected Lifetime	> 20,000 h (constant current), under qualification			
Cooling:				
Flow Rate	4 ... 6 l/min			
Operation Temperature	8 ... 20 °C water temperature (12 ... 25 °C measured with internal temperature sensor)			
Maximum Inlet and Outlet Pressure	400 kPa			
Pressure Drop	60 ... 150 kPa			
Water Connectors	Ø 8 mm (OD) push-in fittings			
Water Quality	Industrial water, unfiltered up to a particle size of 0.5 mm			
Integrated Temperature Sensor	PT 100 (NTC10k optional) at base plate			
Note	Specify exact wavelength needed with your order **See General User Information!**			

* At internal temperature sensor

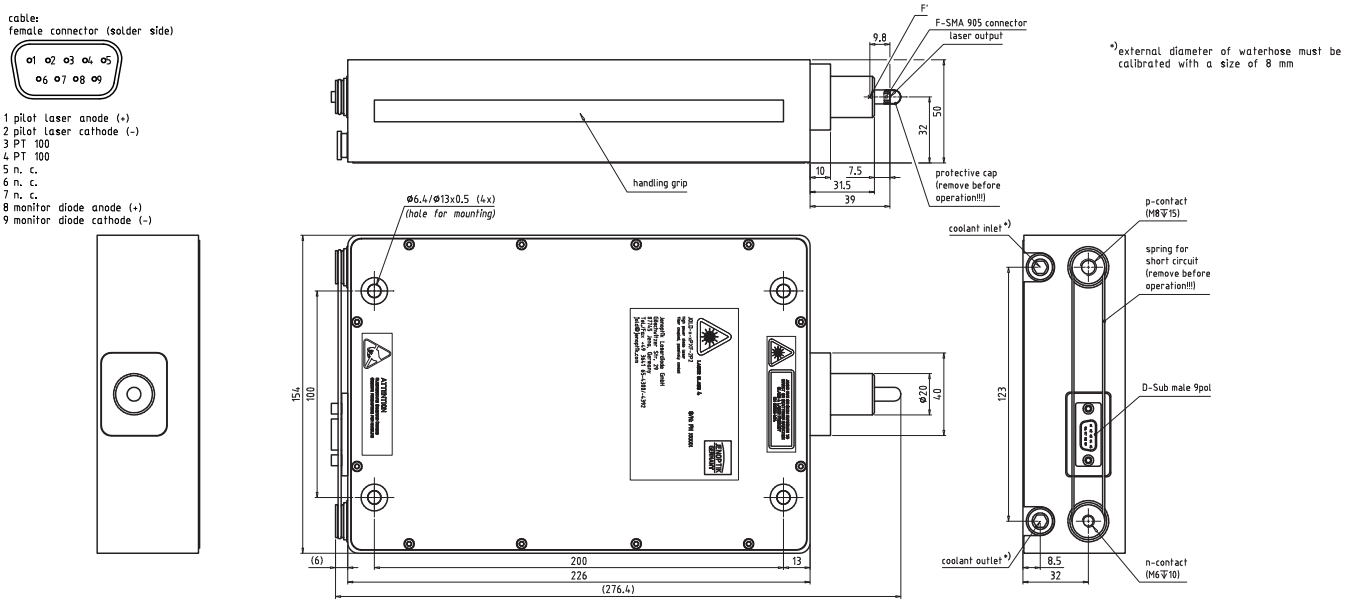

JENOPTIK I Lasers & Material Processing
JENOPTIK Laser GmbH
Goeschwitzer Strasse 29 I 07745 Jena I Germany
Phone: +49 3641 65-3053 I Fax: +49 3641 65-4011
E-mail: sales-laser.lm@jenoptik.com I www.jenoptik.com/diodelasers

Specifications may change in compliance with our quality management system.
07/2012